SPIROCOMBI® MAGNET

SPIROTHERM

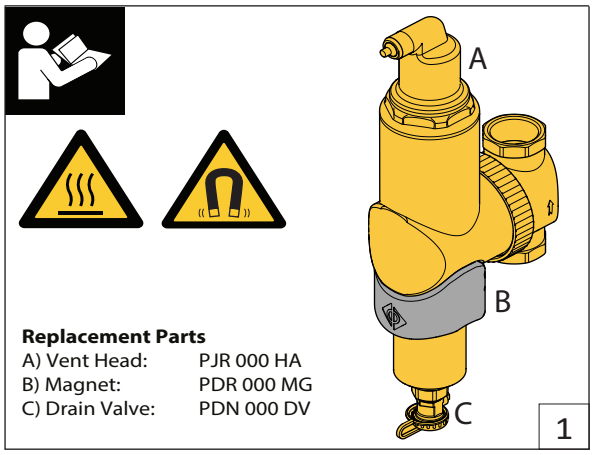

Replacement Parts
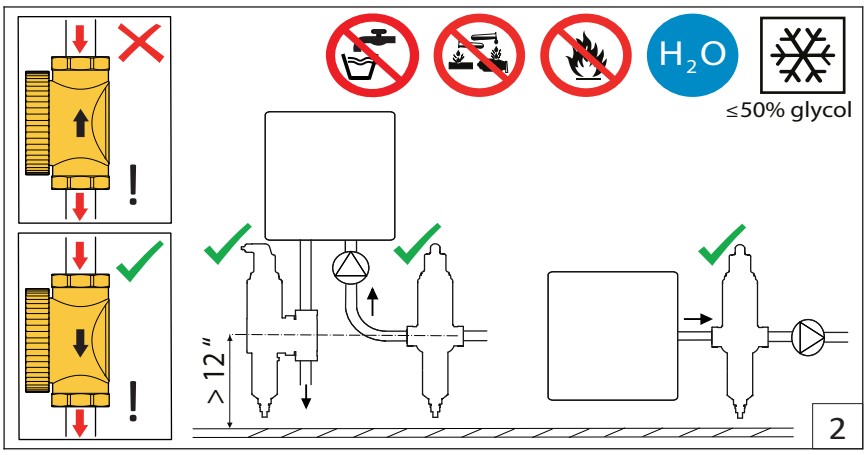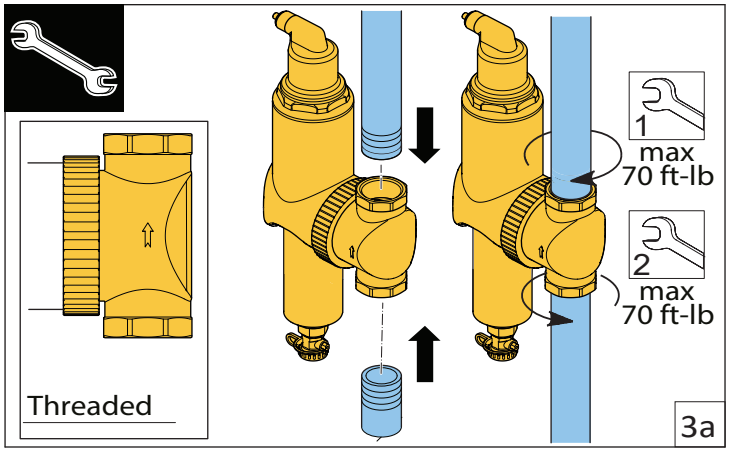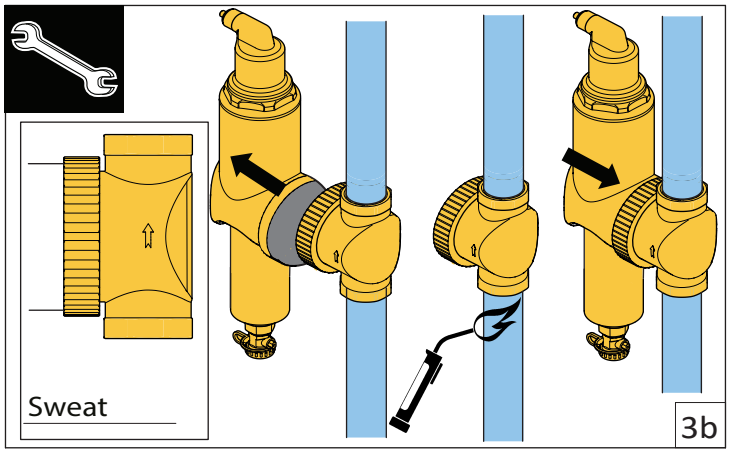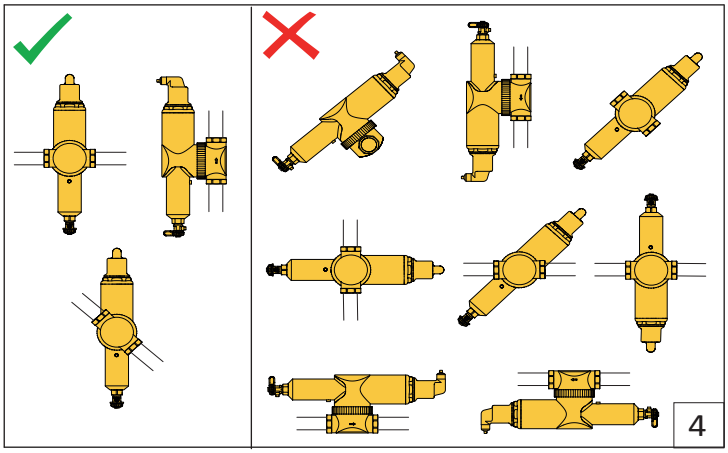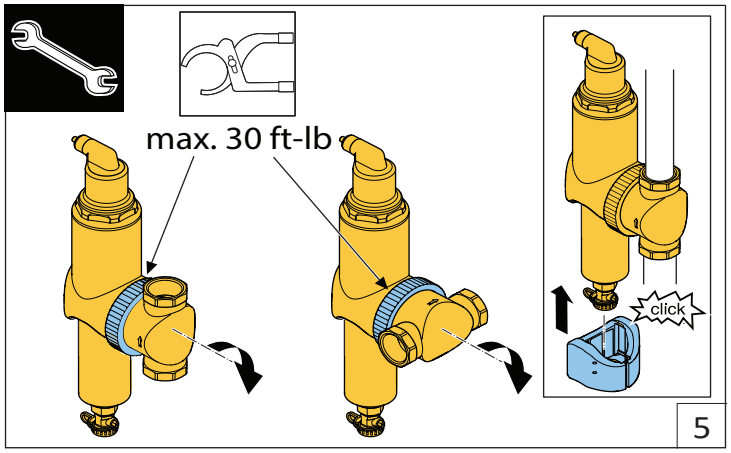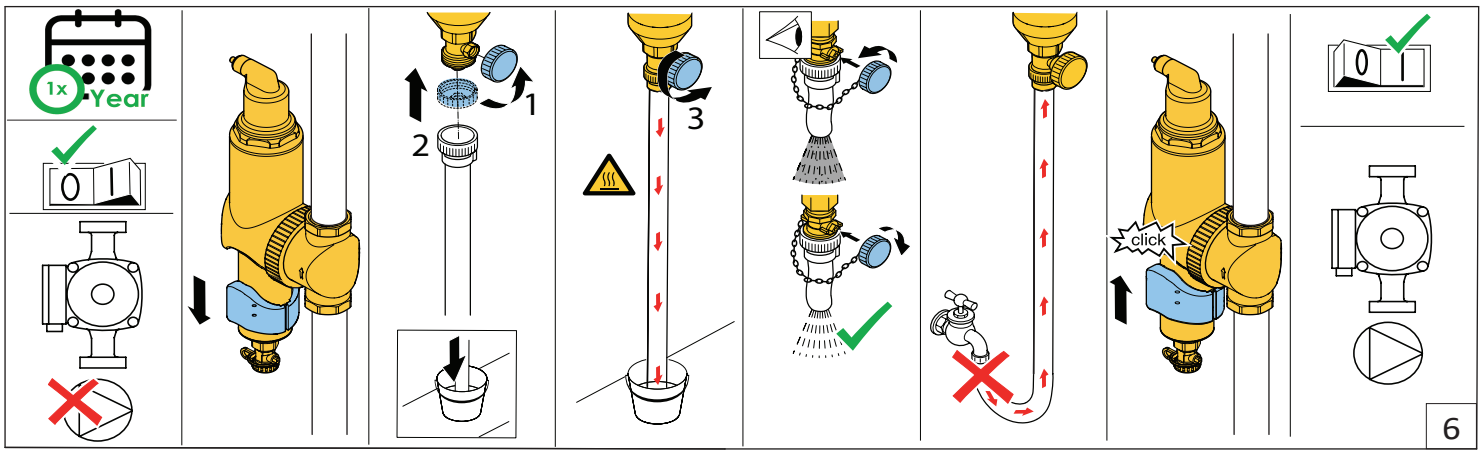
A) Vent Head:	PJR 000 HA
B) Magnet:	PDR 000 MG
C) Drain Valve:	PDN 000 DV